Board For RV1106G

RV1106G_CVR_REF_V1.0

Reference Design Main Functions Introduction	
Power	Discrete
RAM	SPI FLASH/eMMC
Interface	SDMMC/SDIO/MIPI_CSI/I2S/USB/ADC

Rockchip Confidential

Rockchip	Rockchip Electronics Co., Ltd				
Project:	**RV1106G_CVR_REF**				
File:	**00.Cover Page**				
Date:	Friday, March 10, 2023			Rev:	V1.0
Designed by:	whb	Reviewed by:	Default	Sheet:	1 of 26

Index and Notes

Catalogue

Page	Description
Page01	00.Cover Page
Page02	01.Index and Notes
Page03	02.Revision History
Page04	03.Block Diagram
Page05	04.Power Diagram and Sequence
Page06	06.IO Power Domain Map
Page07	10.RV1106G Power/Codec/ETH/USB
Page08	11.RV1106G OSC/RTC/PMU/VCCIO
Page09	12.RV1106G ADC/FLASH/SDMMC
Page10	13.RV1106G SDIO/LCD/VICAP/MIPI
Page11	20.Power-System
Page12	25.USB&CHARGE
Page13	40.Flash-eMMC Flash
Page14	42.Flash-Micro-SD Card
Page15	43.Flash-SPI Flash
Page16	45.VI-Camera Power
Page17	47.VI-Camera
Page18	48.VI-TP9951
Page19	53.VO-RGB LCM(OPTION)
Page20	60.WIFI-SDIO 1T1R
Page21	70.Audio
Page22	74.G-Sensor/Gyroscope
Page23	75.GPS
Page24	87.4G module(OPTION)
Page25	92.Key Array
Page26	99.Mark/Hole

Note

NOTE 1:
Component parameter description
1. DNP stands for component not mounted temporarily
2. If Value or option is DNP, which means the area is reserved without being mounted

NOTE 2:
Please use our recommended components to avoid too many changes.
For more informations about the second source,please refer to our AVL.

Generate Bill of Materials

Header:

Item\tPart\tDescription\tPCB Footprint\tReference\tQuantity\tOption

Combined property string:

{Item}\t{Value}\t{Description}\t{PCB Footprint}\t{Reference}\t{Quantity}\t{Option}

Graphic Description

Note

Option

Description

Rockchip Confidential

Rockchip	Rockchip Electronics Co., Ltd				
Project:	RV1106G_CVR_REF				
File:	01.Index and Notes				
Date:	Friday, March 10, 2023			Rev:	V1.0
Designed by:	whb	Reviewed by:	Default	Sheet:	2 of 26

Revision History

Version	Date	Author	Change Note	Approved
V1.0	2023.03.10	whb	First edition	

Rockchip Confidential

Block Diagram

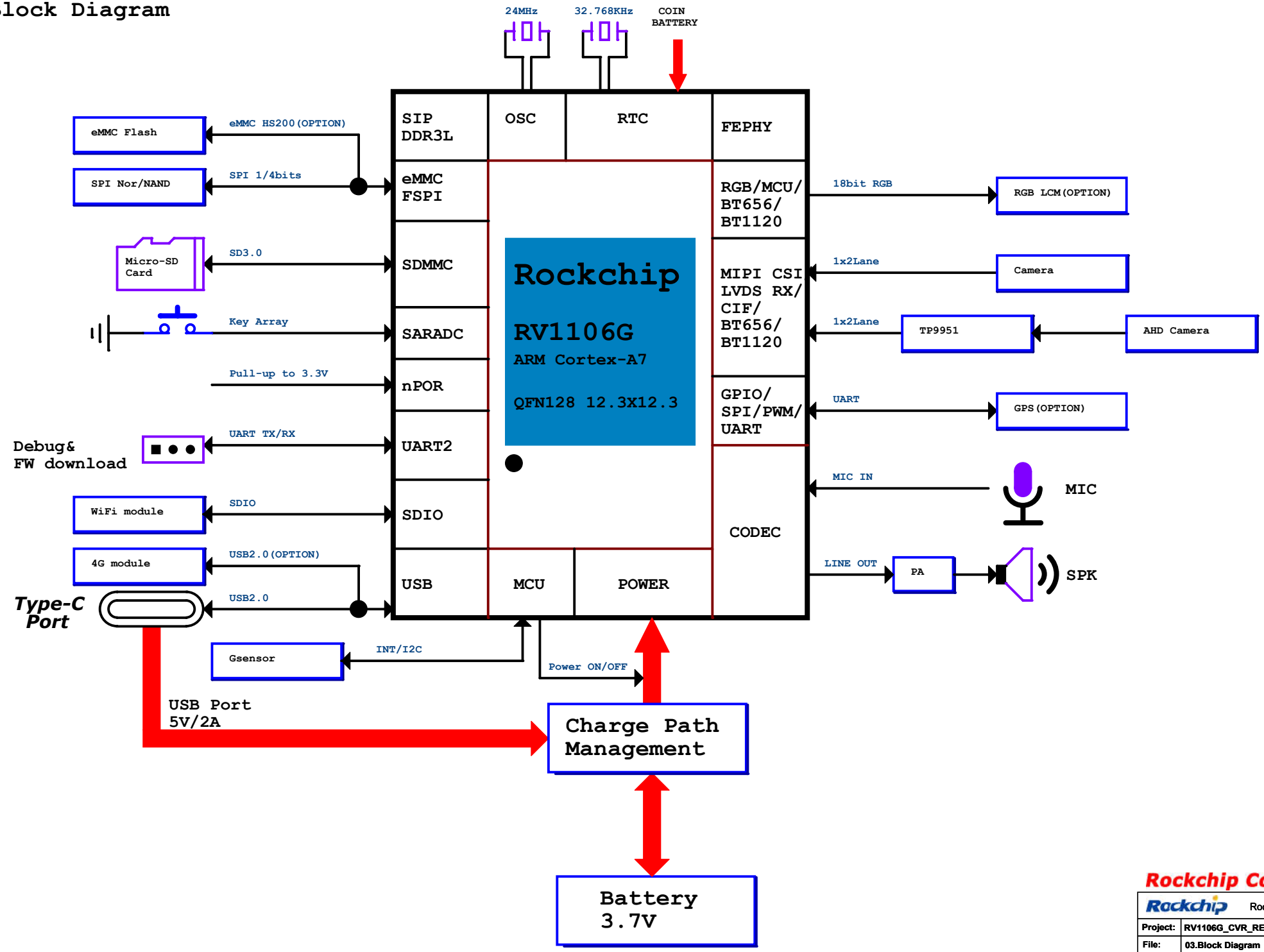

Rockchip Confidential

Rockchip	Rockchip Electronics Co., Ltd				
Project:	RV1106G_CVR_REF				
File:	03.Block Diagram				
Date:	Friday, March 10, 2023			Rev:	V1.0
Designed by:	whb	Reviewed by:	Default	Sheet:	4 of 26

Power Diagram and Sequence

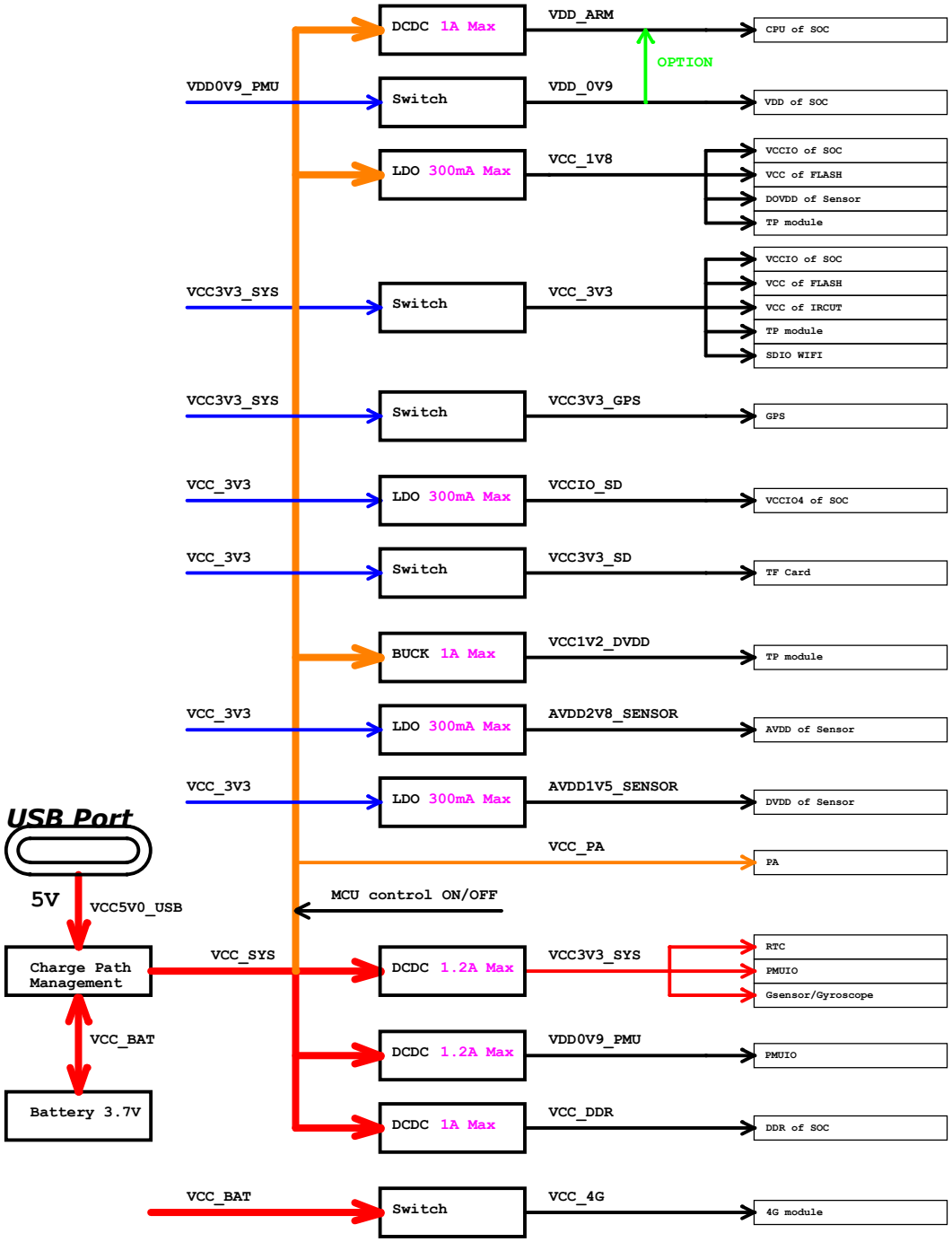

Power-on Sequence

Power Name	PMIC Channel	Time Slot	Default voltage	Peak Current
VDD0V9_PMU	BUCK	Slot: 1	0.875V	
VCC3V3_SYS	BUCK	Slot: 3	3.3V	
VDD_0V9	Switch	Slot: 1	0.875V	
VDD_ARM	BUCK	Slot: 1	0.882V	
VCC_DDR	BUCK	Slot: 2	1.35V	
VCC_1V8	LDO	Slot: 2	1.8V	
VCC_3V3	Switch	Slot: 3	3.3V	
RESET	Finally , nPOR RESET 10ms after VCC_3V3 is ready			

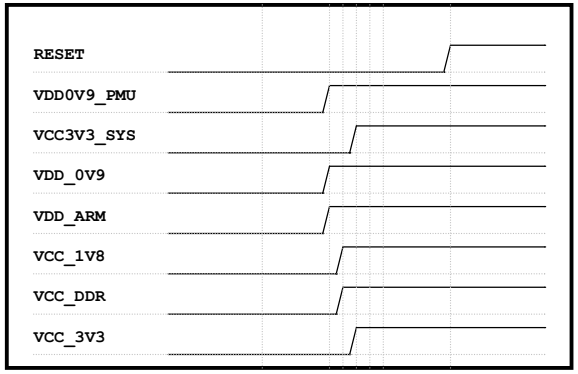

Rockchip Confidential

Rockchip	Rockchip Electronics Co., Ltd				
Project:	RV1106G_CVR_REF				
File:	04.Power Diagram and Sequence				
Date:	Friday, March 10, 2023			Rev:	V1.0
Designed by:	whb	Reviewed by:	Default	Sheet:	5 of 26

IO Power Domain Map

IO Domain	IO Group	Support of IO Voltage		Default Actual assigned IO Domain Voltage			Remark
		1.8V	3.3V	Net Name of Power Supply	Power Source	Voltage	
PMU	Group GPIO0_A		✓	VCC_3V3		3.3V	
VCCIO1	Group GPIO1_AB		✓	VCC_3V3		3.3V	
VCCIO2	Group GPIO4_C	✓		VCC_1V8		1.8V	
VCCIO3	Group GPIO4_AB	✓	✓	VCCIO_FLASH		1.8/3.3V	
VCCIO4	Group GPIO3_A	✓	✓	VCCIO_SD		1.8/3.3V	
VCCIO5	Group GPIO2_AB	✓	✓	VCC_3V3		3.3V	
VCCIO6	Group GPIO1_CD	✓	✓	VCC_3V3		3.3V	
VCCIO7	Group GPIO3_BCD	✓		VCC_1V8		1.8V	

Rockchip Confidential

PART D

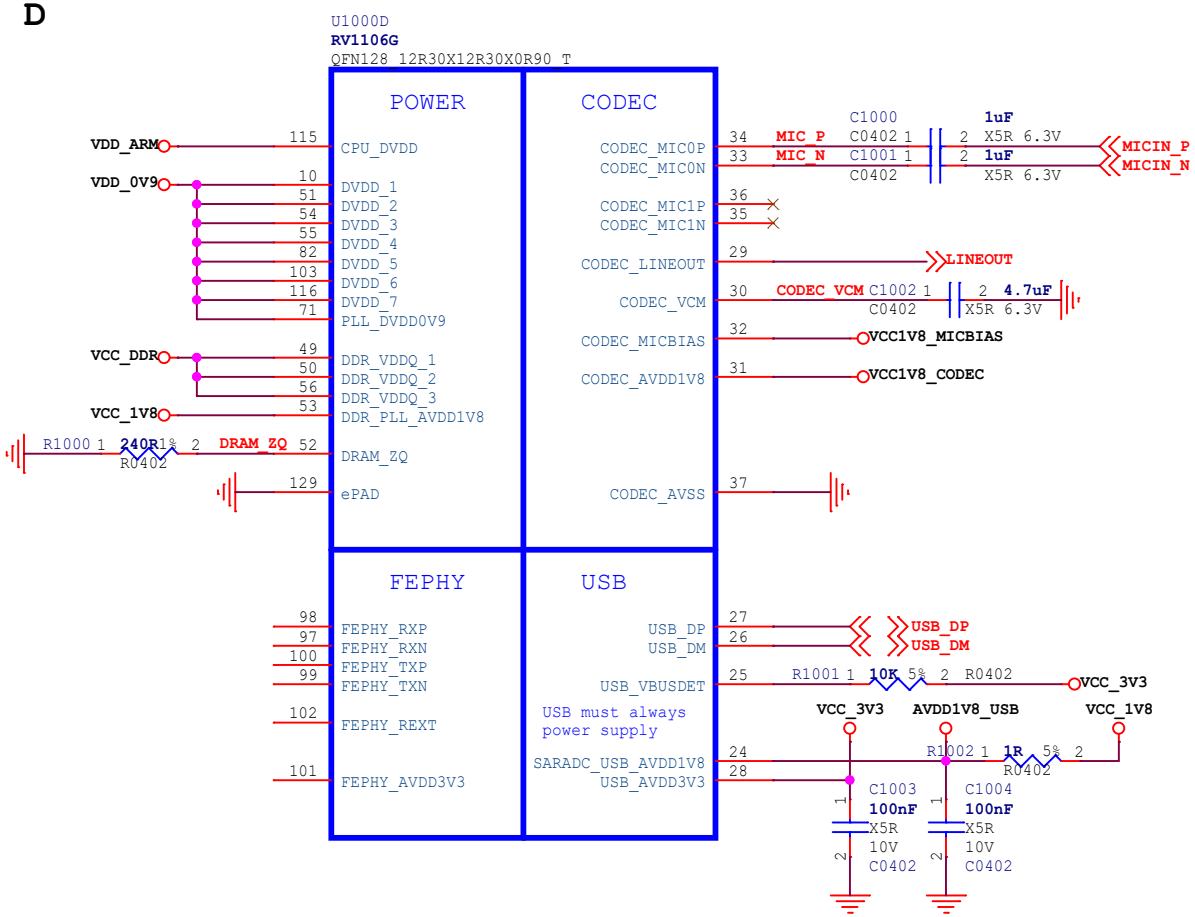

POWER

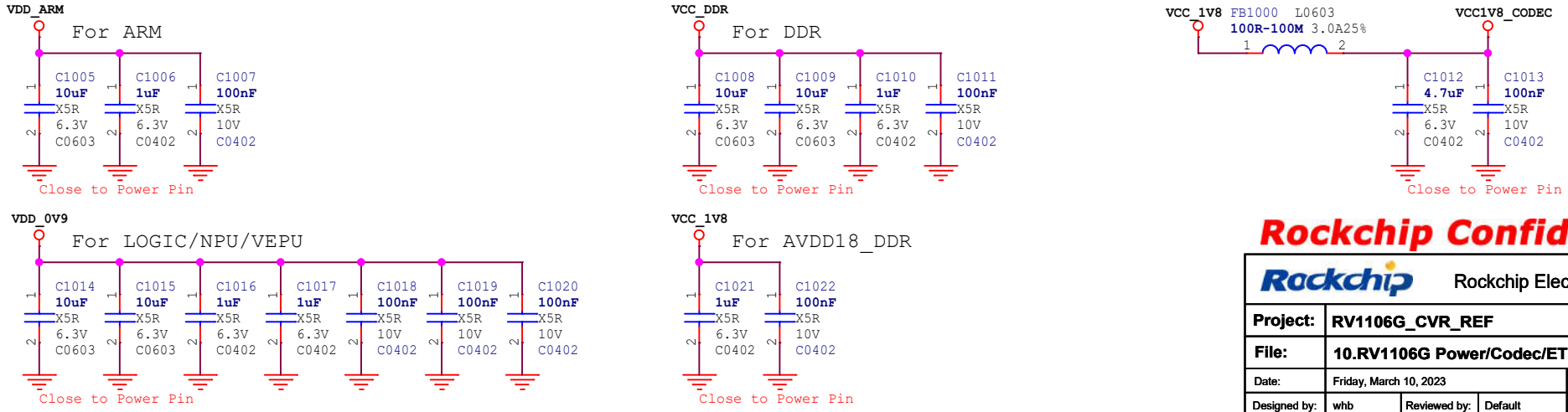

Rockchip Confidential

Rockchip Electronics Co., Ltd					
Project:	RV1106G_CVR_REF				
File:	10.RV1106G Power/Codec/ETH/USB				
Date:	Friday, March 10, 2023			Rev:	V1.0
Designed by:	whb	Reviewed by:	Default	Sheet:	7 of 26

PART A

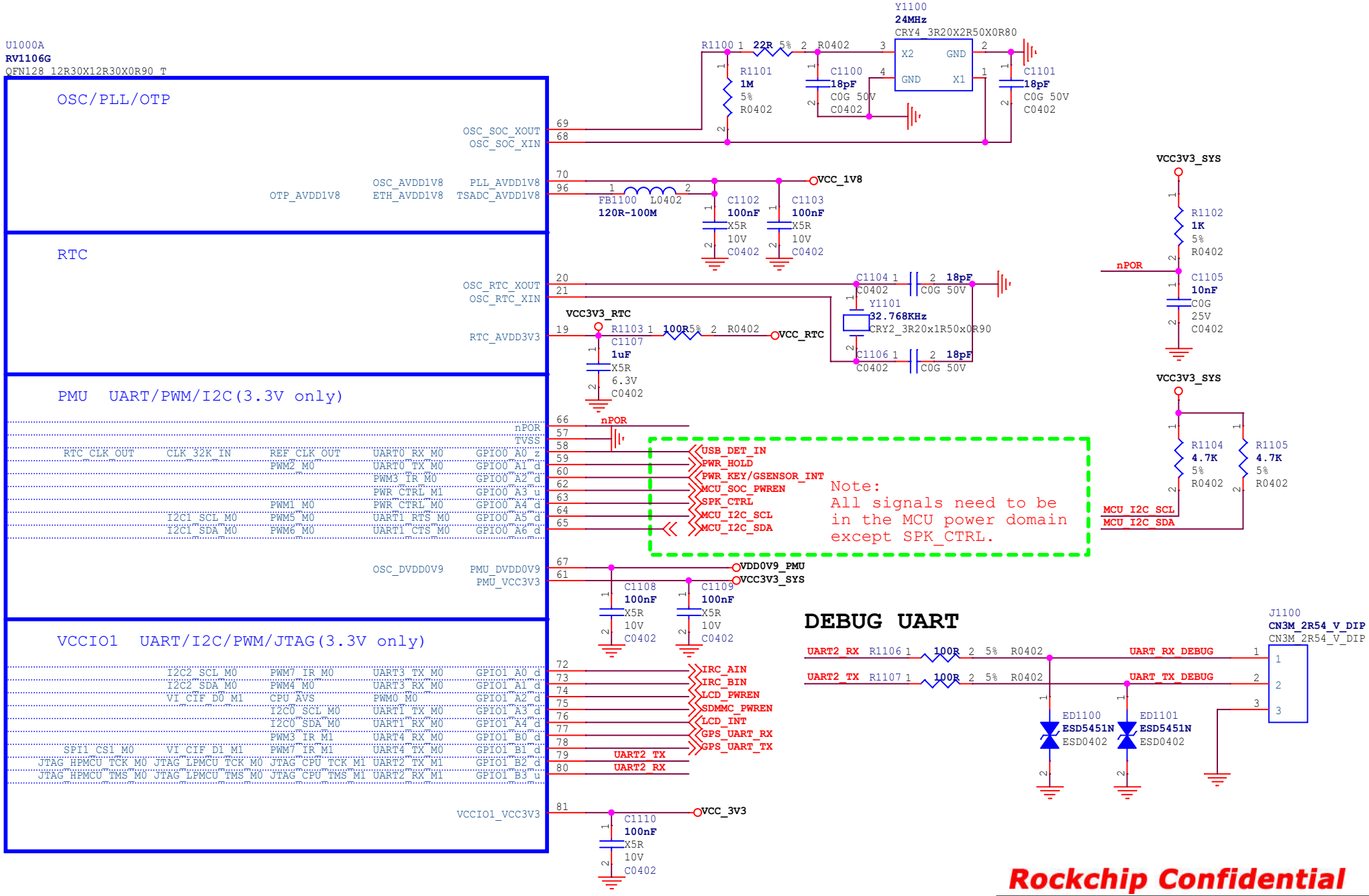

Rockchip Confidential

Rockchip Electronics Co., Ltd			
Project:	RV1106G_CVR_REF		
File:	11.RV1106G OSC/RTC/PMU/VCCIO		
Date:	Friday, March 10, 2023	Rev:	V1.0
Designed by: whb	Reviewed by: Default	Sheet:	8 of 26

PART B

U1000B
RV1106G
QFN128_12R30X12R30X0R90_T

VCCIO2 SARADC/PWM(1.8V only,input only)

			SARADC_IN0	GPI4_C0_z	23
		PWM1_M1	SARADC_IN1	GPI4_C1_z	22

VCCIO2_VCC1V8 supply from USB_AVDD1V8

VCCIO3 EMMC/FSPI/UART/I2C/SPI

		FSPI_D0	EMMC_D0	GPIO4_A4_u	41
		FSPI_D1	EMMC_D1	GPIO4_A3_u	42
		FSPI_D2	EMMC_D2	GPIO4_A2_u	44
		FSPI_D3	EMMC_D3	GPIO4_A6_u	39
SPI1_CS0_M0	I2C2_SDA_M1	UART1_TX_M2	EMMC_D4	GPIO4_A5_u	40
SPI1_CLK_M0	I2C2_SCL_M1	UART1_RX_M2	EMMC_D5	GPIO4_A7_u	38
SPI1_MOSI_M0	I2C0_SCL_M1	UART0_TX_M2	EMMC_D6	GPIO4_A1_u	45
SPI1_MISO_M0	I2C0_SDA_M1	UART0_RX_M2	EMMC_D7	GPIO4_A0_u	46
					47
		FSPI_CS0	EMMC_CMD	GPIO4_B0_u	48
		FSPI_CLK	EMMC_CLK	GPIO4_B1_d	
				VCCIO3_VCC	43

VCCIO4 SDMMC/UART/JTAG/PWM/I2C

			SDMMC_DET	GPIO3_A1_u	11
	PWM8_M0	UART2_RX_M0	SDMMC_D0	GPIO3_A3_u	14
	PWM9_M0	UART2_TX_M0	SDMMC_D1	GPIO3_A2_u	12
JTAG_HPMCU_TCK_M1	JTAG_CPU_TCK_M0	UART5_RX_M0	SDMMC_D2	GPIO3_A7_u	18
JTAG_HPMCU_TMS_M1	JTAG_CPU_TMS_M0	UART5_TX_M0	SDMMC_D3	GPIO3_A6_u	17
JTAG_LPMCU_TCK_M1 I2C0_SCL_M2	PWM10_M0	UART5_RTS_M0	SDMMC_CLK	GPIO3_A4_d	15
JTAG_LPMCU_TMS_M1 I2C0_SDA_M2	PWM11_IR_M0	UART5_CTS_M0	SDMMC_CMD	GPIO3_A5_u	16
				VCCIO4_VCC	13

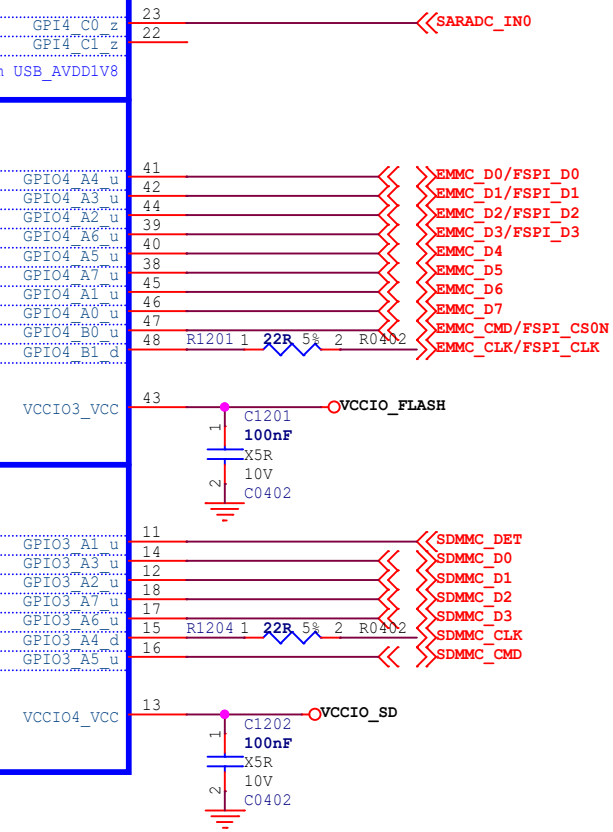

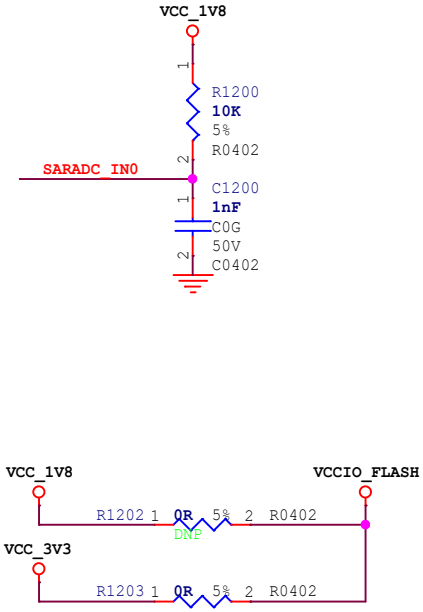

Rockchip Confidential

Rockchip Electronics Co., Ltd					
Project:	RV1106G_CVR_REF				
File:	12.RV1106G ADC/FLASH/SDMMC				
Date:	Friday, March 10, 2023			Rev:	V1.0
Designed by:	whb	Reviewed by:	Default	Sheet:	9 of 26

PART C

Rockchip Confidential

Rockchip	Rockchip Electronics Co., Ltd				
Project:	RV1106G_CVR_REF				
File:	13.RV1106G SDIO/LCD/VICAP/MIPI				
Date:	Friday, March 10, 2023			Rev:	V1.0
Designed by:	whb	Reviewed by:	Default	Sheet:	10 of 26

VDD0V9_PMU
Setp 1

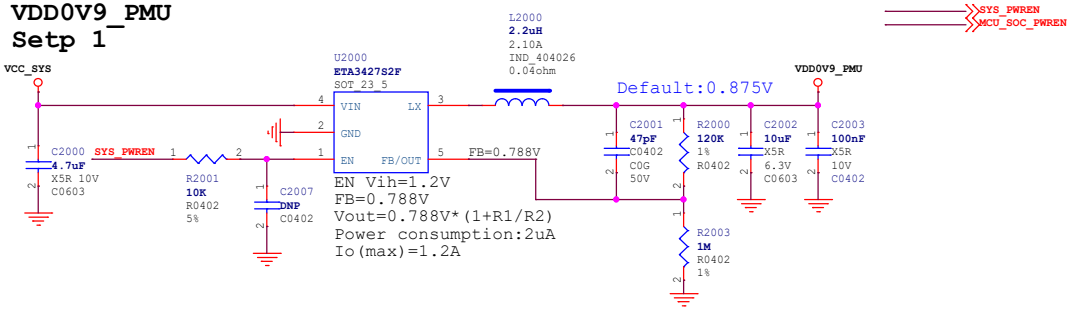

VDD_0V9
Setp 1

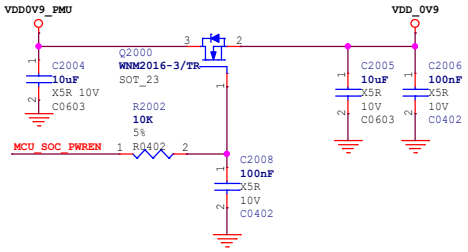

VCC_DDR
Setp 2

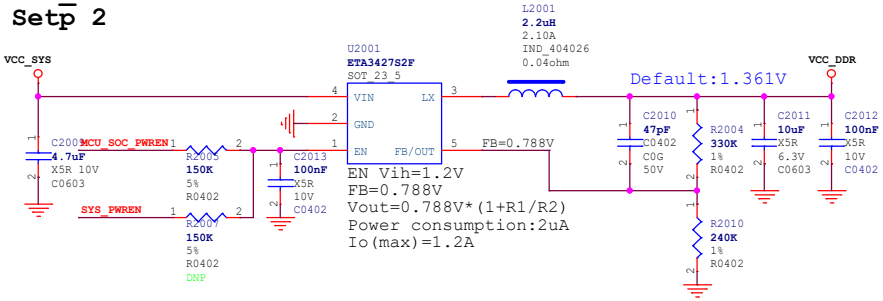

VDD_ARM
Setp 1

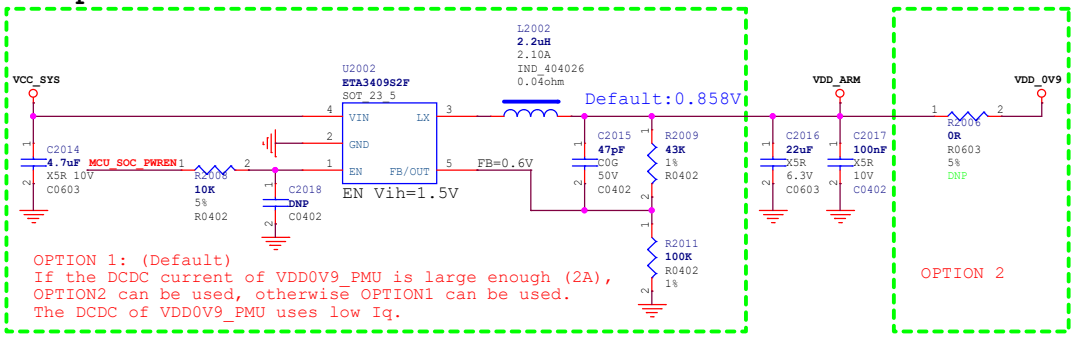

VCC3V3_SYS
Setp 3

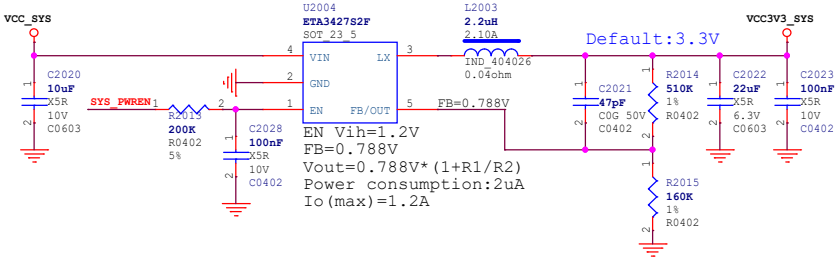

VCC_1V8
Setp 2

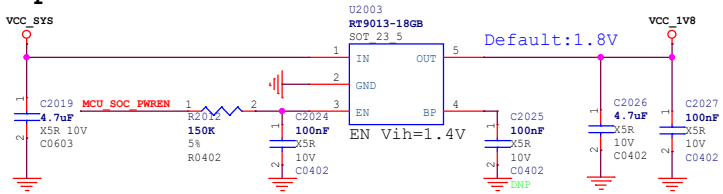

VCC_3V3
Setp 3

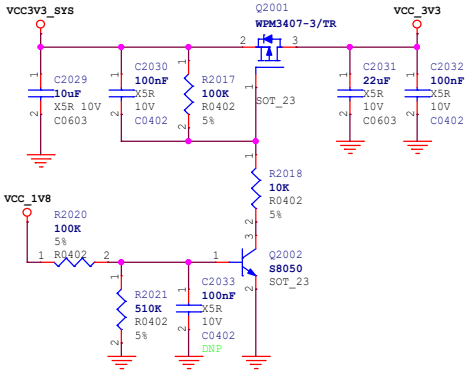

RTC Power

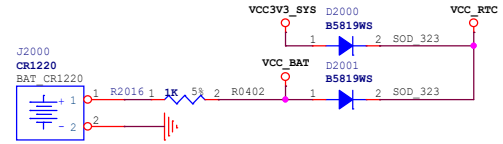

Power LED(OPTION)

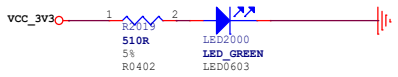

Rockchip Confidential

Rockchip	Rockchip Electronics Co., Ltd				
Project:	RV1106G_CVR_REF				
File:	20.Power-System				
Date:	Friday, March 10, 2023			Rev:	V1.0
Designed by:	whb	Reviewed by:	Default	Sheet:	11 of 26

USB HOST

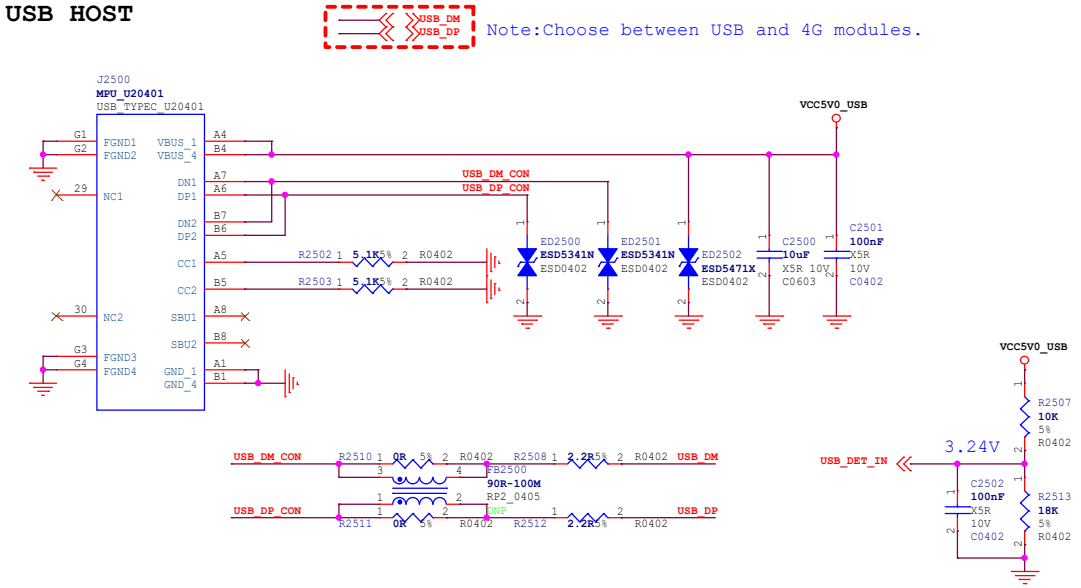

SYS_POWER

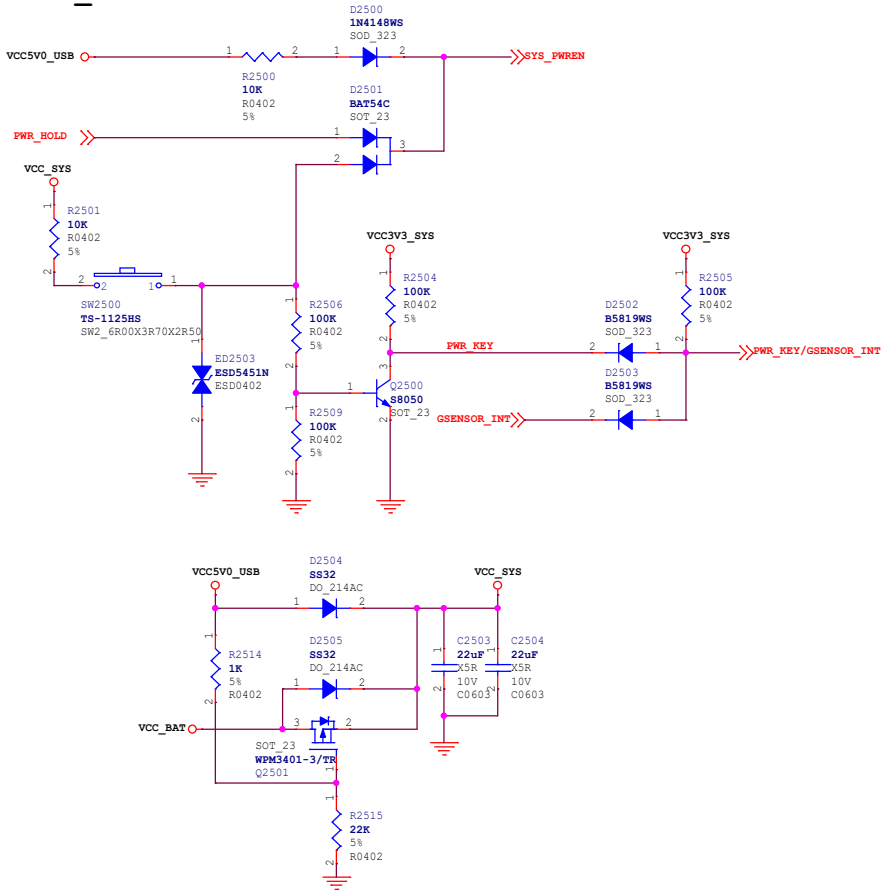

CHARGE

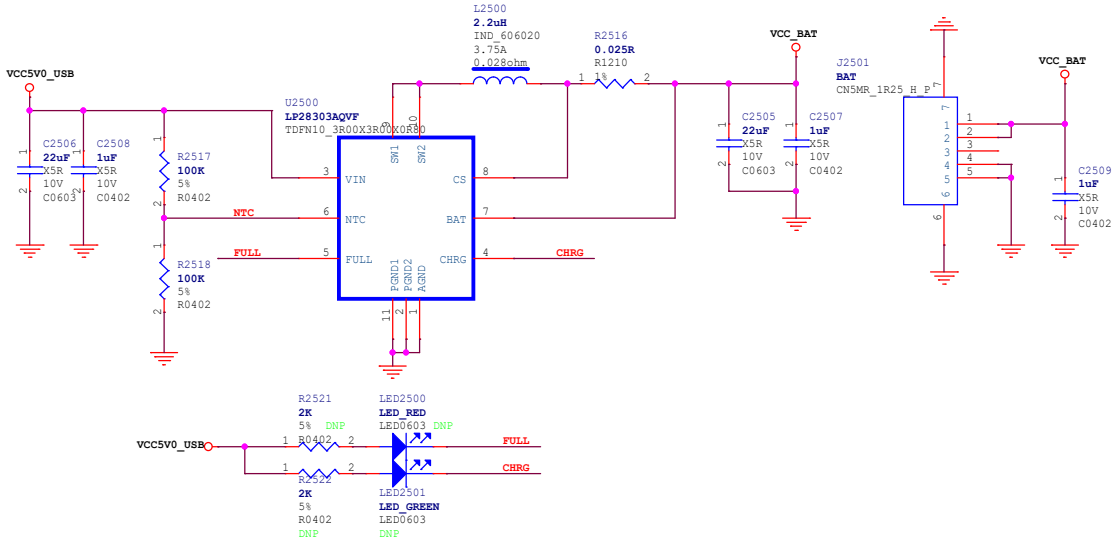

BATTERY

FUEL GAUGES

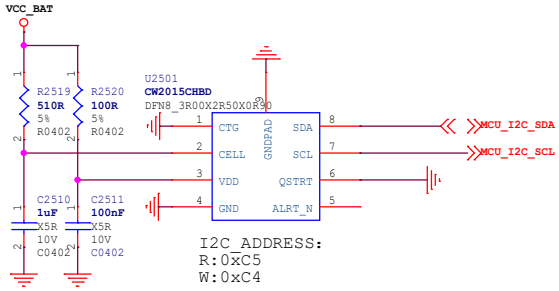

Rockchip Confidential

Rockchip	Rockchip Electronics Co., Ltd				
Project:	RV1106G_CVR_REF				
File:	25.USB&CHARGE				
Date:	Friday, March 10, 2023			Rev:	V1.0
Designed by:	whb	Reviewed by:	Default	Sheet:	12 of 26

eMMC

NOTE:
Refer to the latest AVL for parts selection.

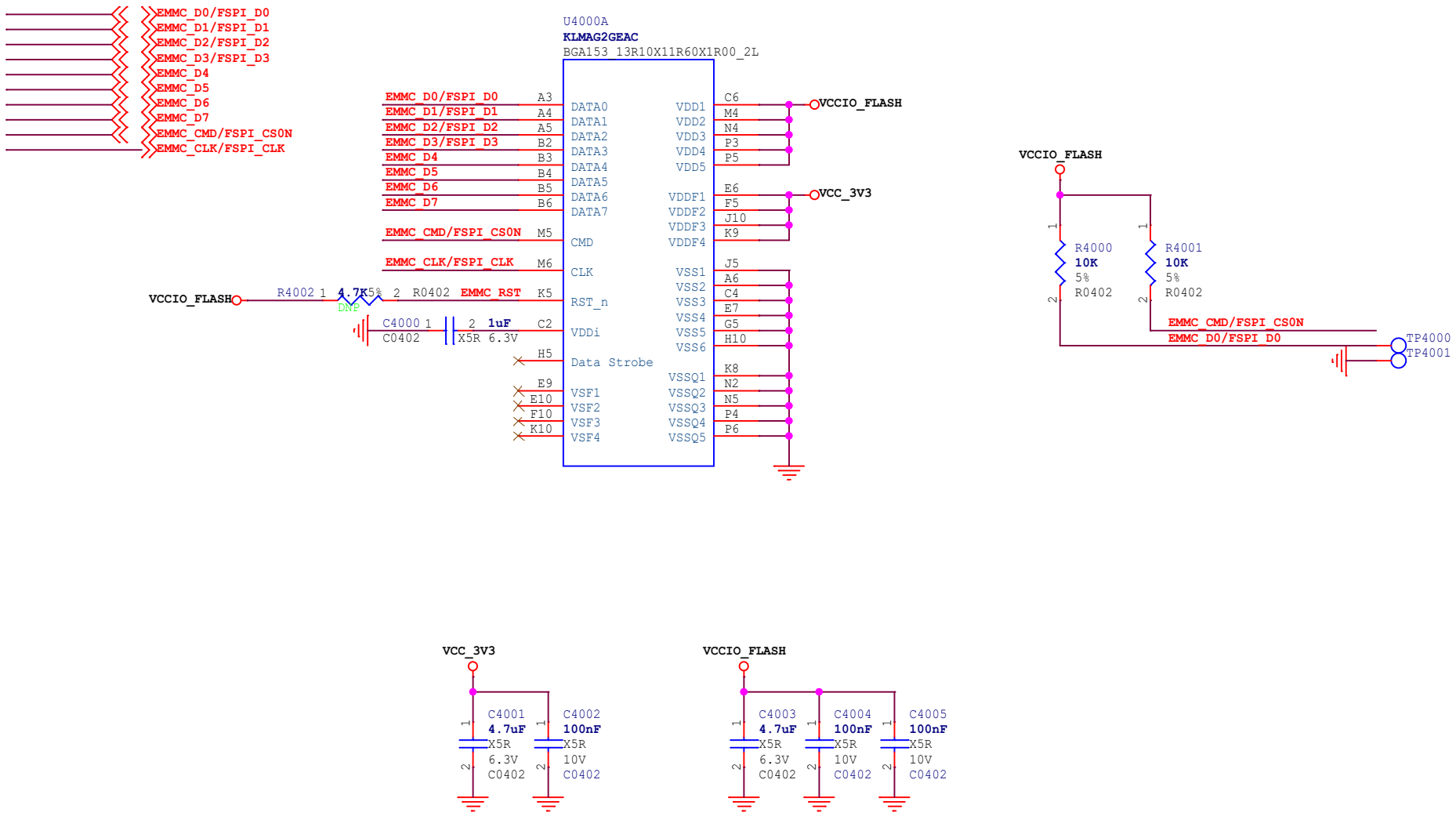

Rockchip Confidential

Rockchip Electronics Co., Ltd					
Project:	RV1106G_CVR_REF				
File:	40.Flash-eMMC Flash				
Date:	Friday, March 10, 2023			Rev:	V1.0
Designed by:	whb	Reviewed by:	Default	Sheet:	13 of 26

Micro-SD Card

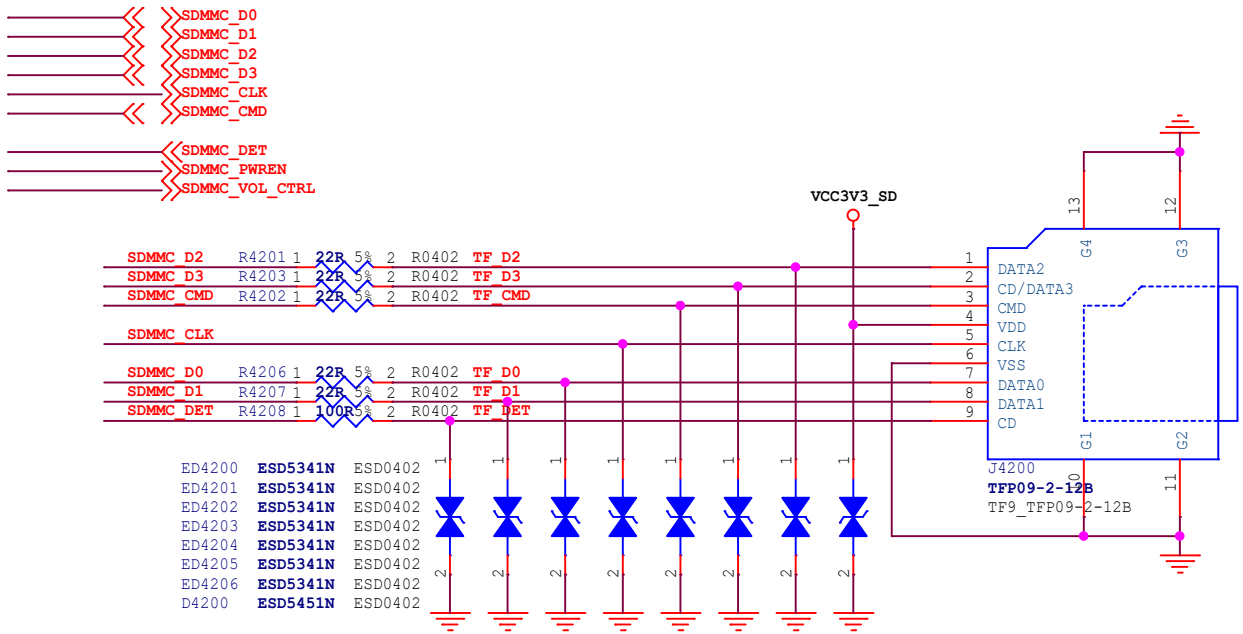

Card Power

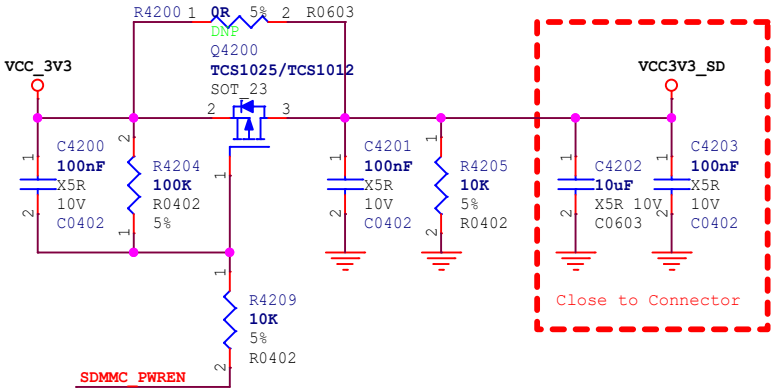

SDMMC0_PWREN=L VCC3V3_SD=3.3V(Default)
SDMMC0_PWREN=H VCC3V3_SD=0V

IO Power

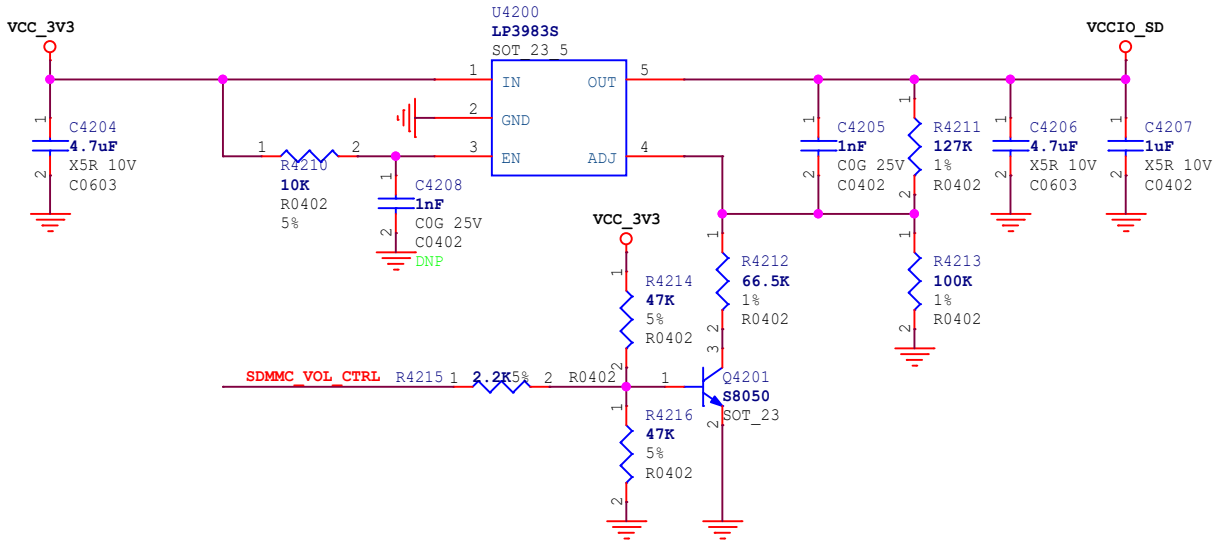

SDIO2.0 SDMMC0_VOL_CTRL=H VCCIO_SD=3.34V(Default)
SDIO3.0 SDMMC0_VOL_CTRL=L VCCIO_SD=1.816V

Rockchip Confidential

Rockchip	Rockchip Electronics Co., Ltd				
Project:	RV1106G_CVR_REF				
File:	42.Flash-Micro-SD Card				
Date:	Friday, March 10, 2023			Rev:	V1.0
Designed by:	whb	Reviewed by:	Default	Sheet:	14 of 26

SPI Flash

NOTE:
Refer to the latest AVL for parts selection.

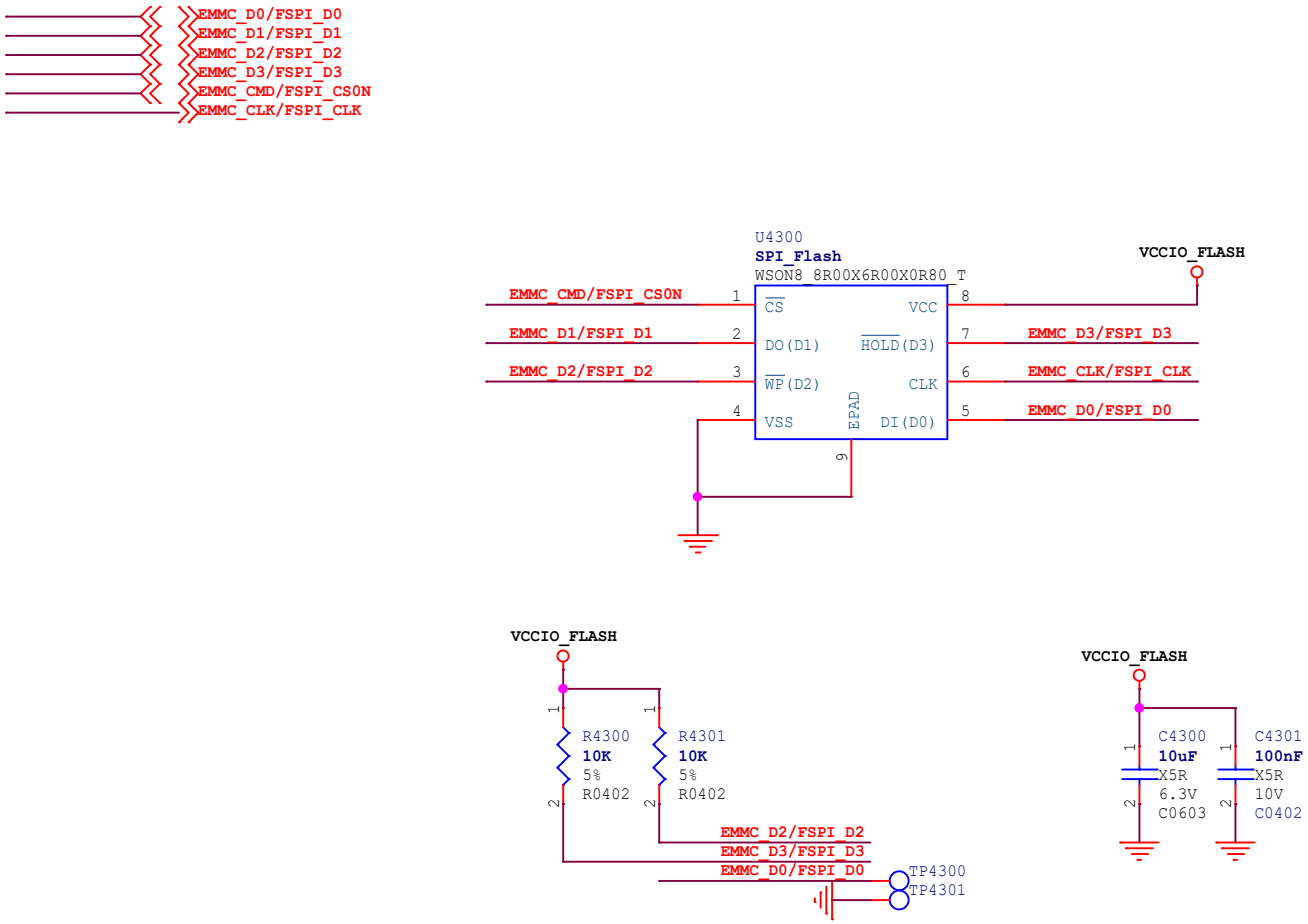

Rockchip Confidential

Rockchip Electronics Co., Ltd					
Project:	RV1106G_CVR_REF				
File:	43.Flash-SPI Flash				
Date:	Friday, March 10, 2023			Rev:	V1.0
Designed by:	whb	Reviewed by:	Default	Sheet:	15 of 26

AVDD2V8_SENSOR

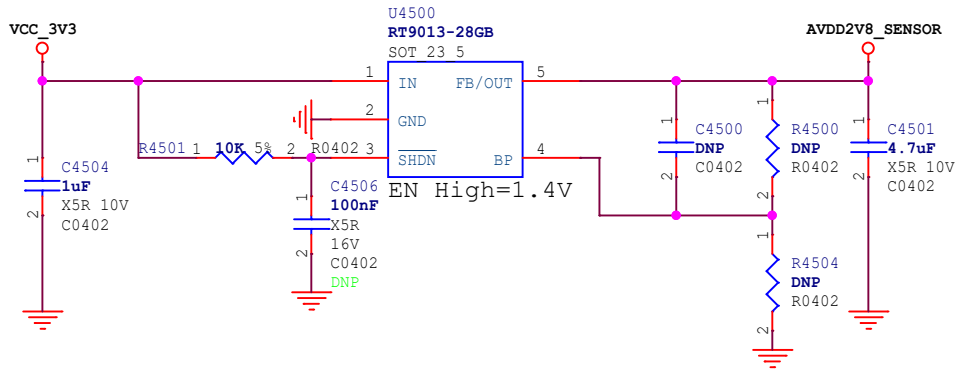

DVDD1V5_SENSOR

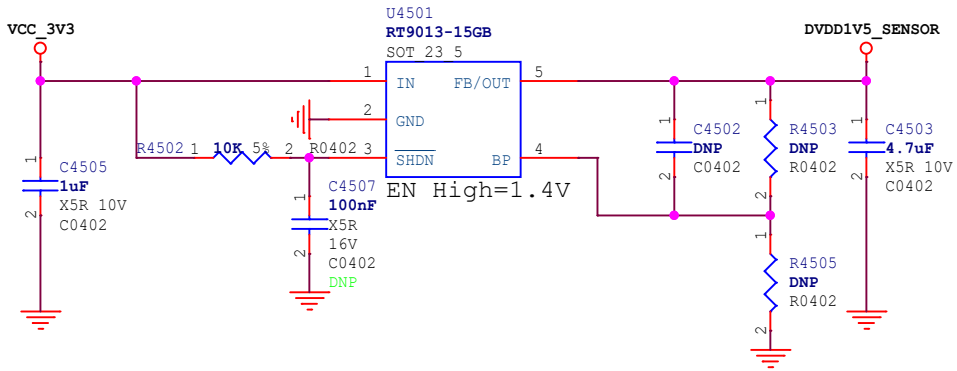

Note:
Default power-on timing:
All three power on at the same time.
Or DOVDD(1V8)-->DVDD(1V5)-->AVDD(2V8)

IR-CUT

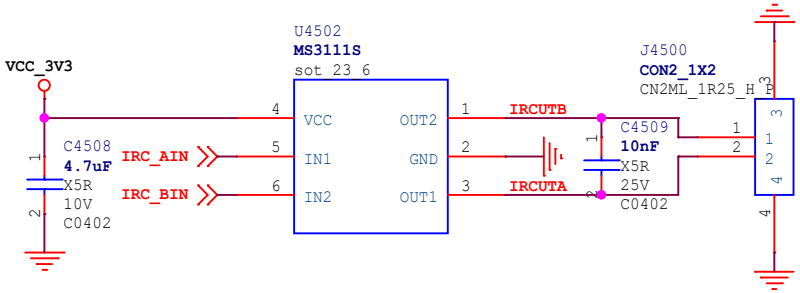

Rockchip Confidential

Rockchip	Rockchip Electronics Co., Ltd				
Project:	RV1106G_CVR_REF				
File:	45.VI-Camera Power				
Date:	Friday, March 10, 2023			Rev:	V1.0
Designed by:	whb	Reviewed by:	Default	Sheet:	16 of 26

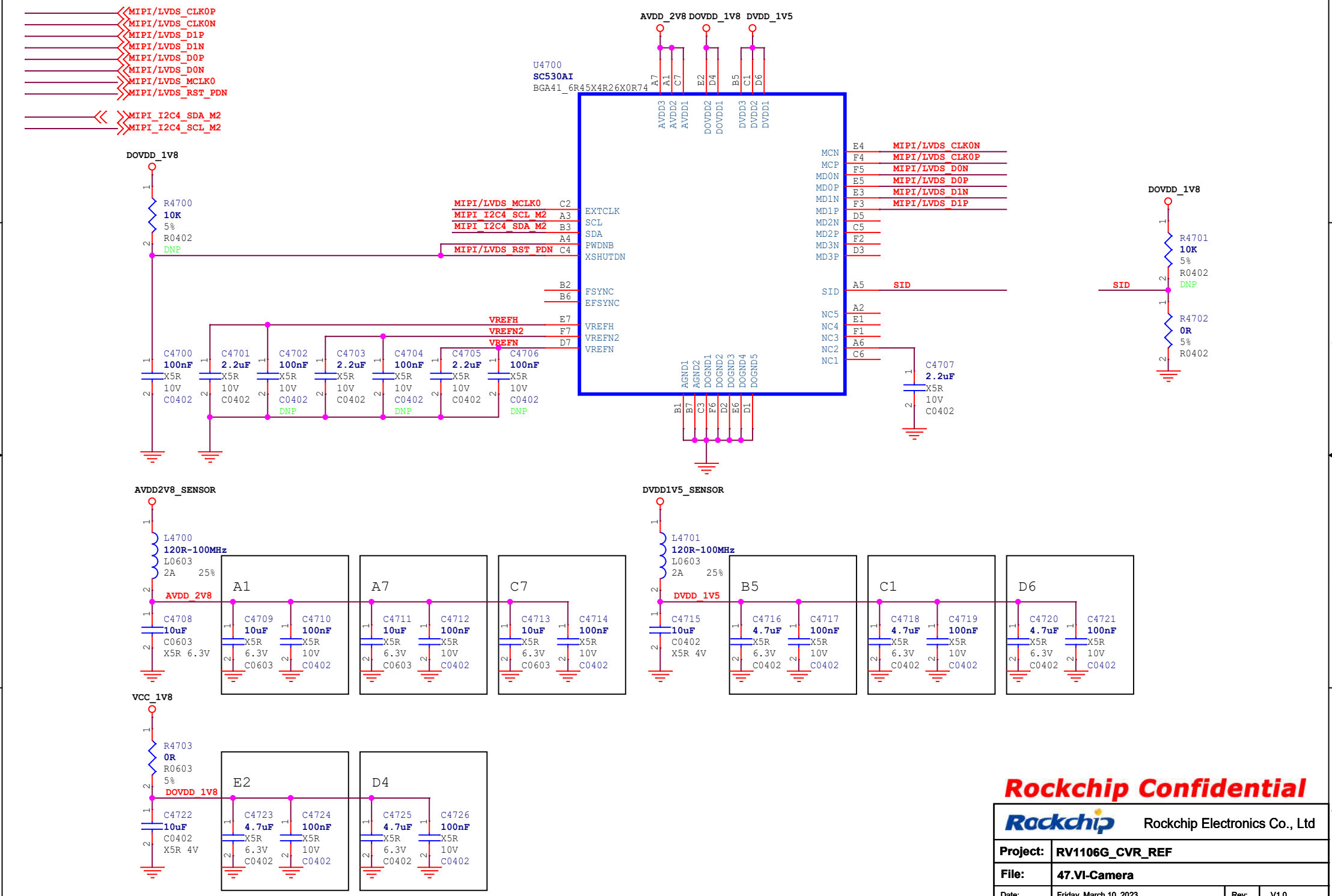

Rockchip Confidential

Rockchip Electronics Co., Ltd					
Project:	RV1106G_CVR_REF				
File:	47.VI-Camera				
Date:	Friday, March 10, 2023			Rev:	V1.0
Designed by:	whb	Reviewed by:	Default	Sheet:	17 of 26

Voltage rise up : There is no special requirement for 1V2/3.3V/1.8V timing

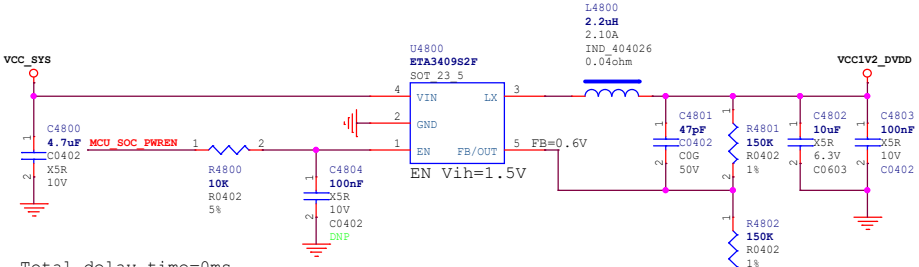

Total delay time=0ms
SY8089AAAC Soft start time is 1.2ms

TYP I=1~7mA

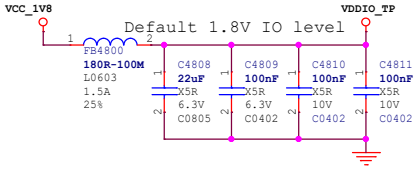

TYP I=14mA

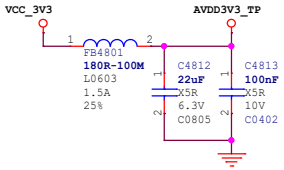

TYP I=190mA

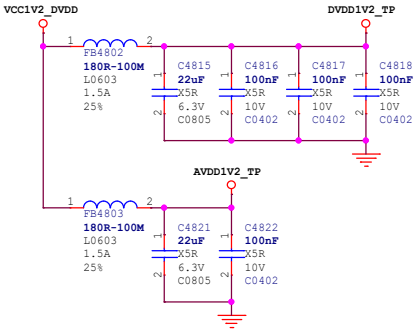

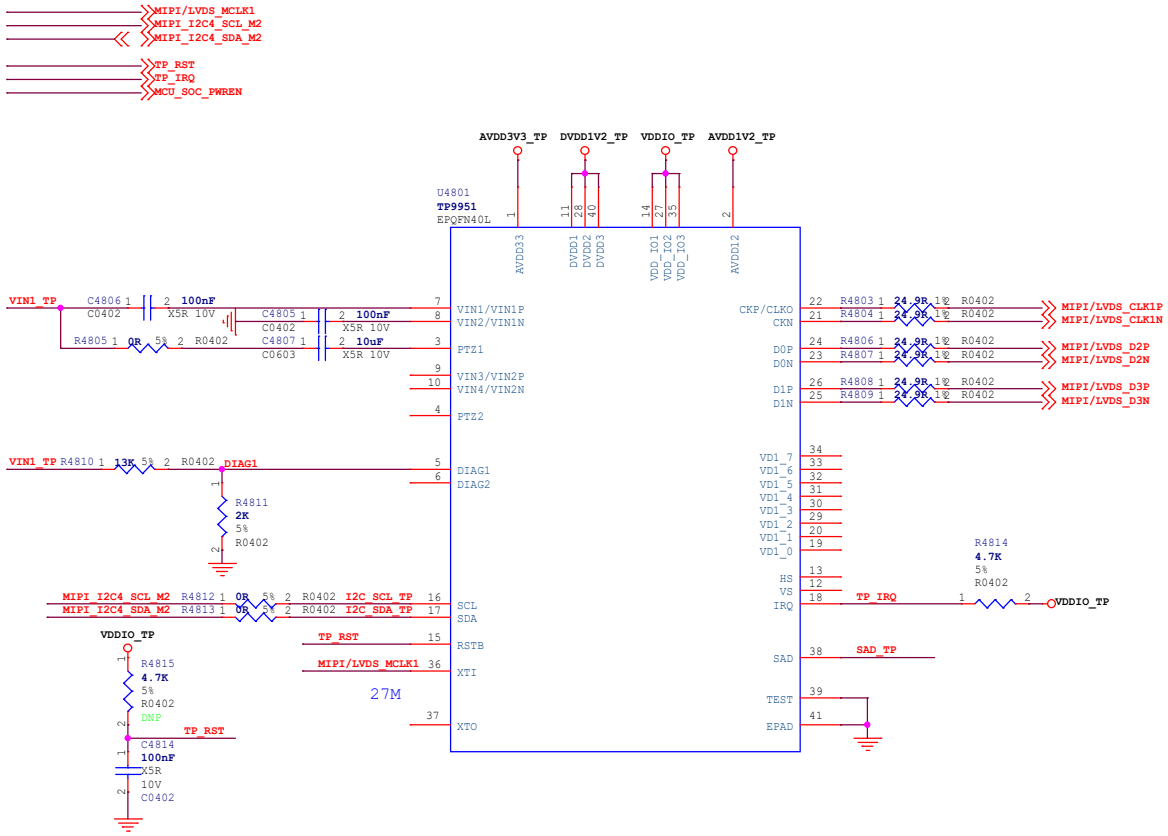

Note:
If you need to use high voltage, consider using boost or taking power from the rear headlights.

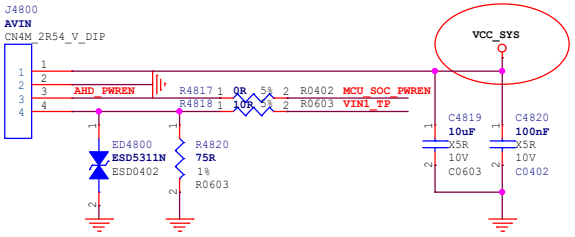

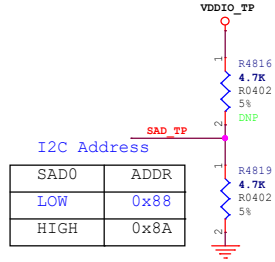

I2C Address

SAD0	ADDR
LOW	0x88
HIGH	0x8A

Rockchip Confidential

Rockchip	Rockchip Electronics Co., Ltd				
Project:	RV1106G_CVR_REF				
File:	48.VI-TP9951				
Date:	Friday, March 10, 2023			Rev:	V1.0
Designed by:	whb	Reviewed by:	Default	Sheet:	18 of 26

BT656/BT1120/RGB Interface

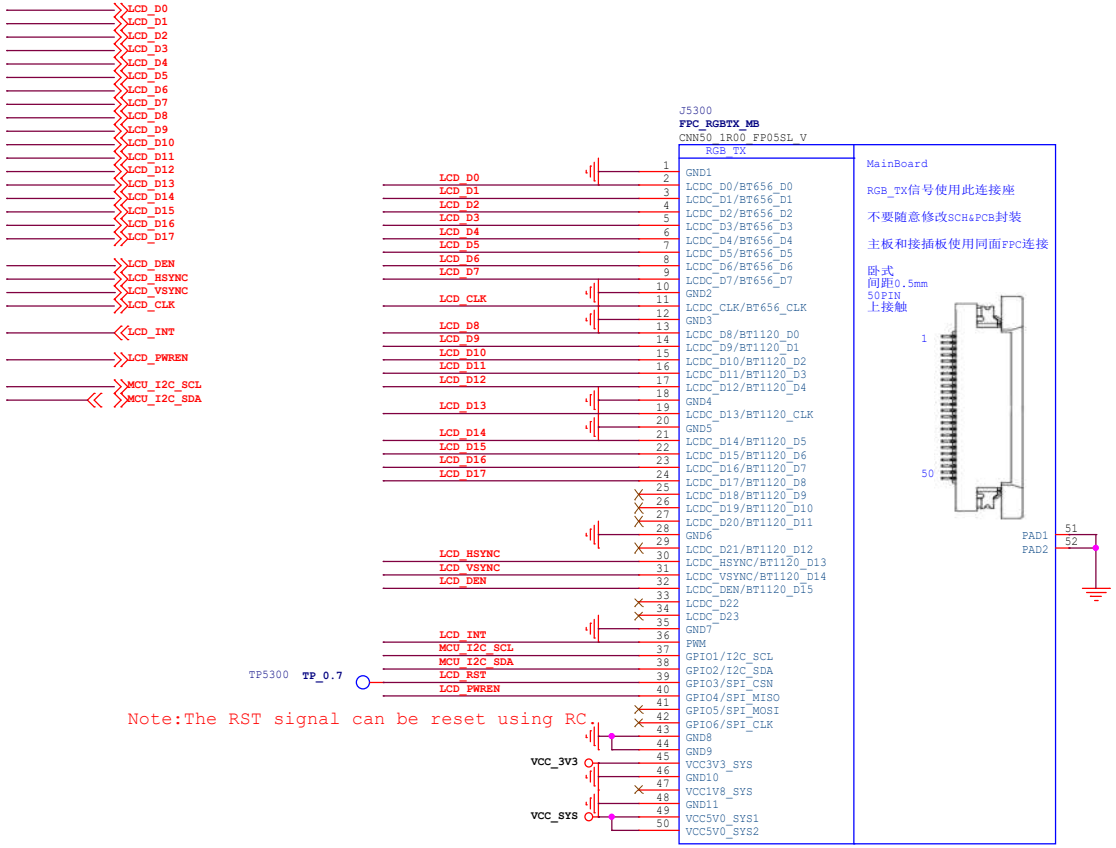

Note:The RST signal can be reset using RC.

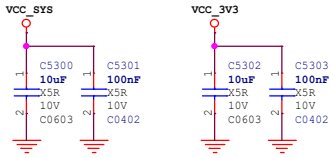

Mode	RGB parallel		RGB serial		BT1120	BT656	mcu
	18bit	16bit	2x12	3x8/4x8	16bit	8bit	8bit
LCD_D0	B0	B0	D0	D0	D0	D0	D0
LCD_D1	B1	B1	D1	D1	D1	D1	D1
LCD_D2	B2	B2	D2	D2	D2	D2	D2
LCD_D3	B3	B3	D3	D3	D3	D3	D3
LCD_D4	B4	B4	D4	D4	D4	D4	D4
LCD_D5	B5	G0	D5	D5	D5	D5	D5
LCD_D6	G0	G1	D6	D6	D6	D6	D6
LCD_D7	G1	G2	D7	D7	D7	D7	D7
LCD_D8	G2	G3	D8	--	D8	--	--
LCD_D9	G3	G4	D9	--	D9	--	--
LCD_D10	G4	G5	D10	--	D10	--	--
LCD_D11	G5	R0	D11	--	D11	--	--
LCD_D12	R0	R1	--	--	D12	--	--
LCD_D13	R1	R2	--	--	D13	--	--
LCD_D14	R2	R3	--	--	D14	--	--
LCD_D15	R3	R4	--	--	D15	--	--
LCD_D16	R4	--	--	--	--	--	--
LCD_D17	R5	--	--	--	--	--	--
LCD_DEN	DEN	DEN	DEN	DEN	--	--	RDN
LCD_HSYNC	HSYNC	HSYNC	HSYNC	HSYNC	--	--	WRN
LCD_VSYNC	VSYNC	VSYNC	VSYNC	VSYNC	--	--	CSN
LCD_DCLK	DCLK	DCLK	DCLK	DCLK	DCLK	DCLK	RS

Support BT601 YCbCr 422 8bit output
Support BT656 YCbCr 422 8bit output
Support BT1120 YCbCr 422 16bit output, single-edge sampling
Support RGB parallel 18bit/16bit output
Support RGB serial 2x12/3x8/4x8 mode output
Support Mcu serial 3x8/4x8 mode output

BT1120 16bit Mode
Default: D0-D7 <--> Y0-Y7 , D8-D15 <--> C0-C7
Swap ON: D0-D7 <--> C0-C7 , D8-D15 <--> Y0-Y7

Rockchip Confidential

Rockchip	Rockchip Electronics Co., Ltd				
Project:	RV1106G_CVR_REF				
File:	53.VO-RGB LCM(OPTION)				
Date:	Friday, March 10, 2023			Rev:	V1.0
Designed by:	whb	Reviewed by:	Default	Sheet:	19 of 26

WIFI Module

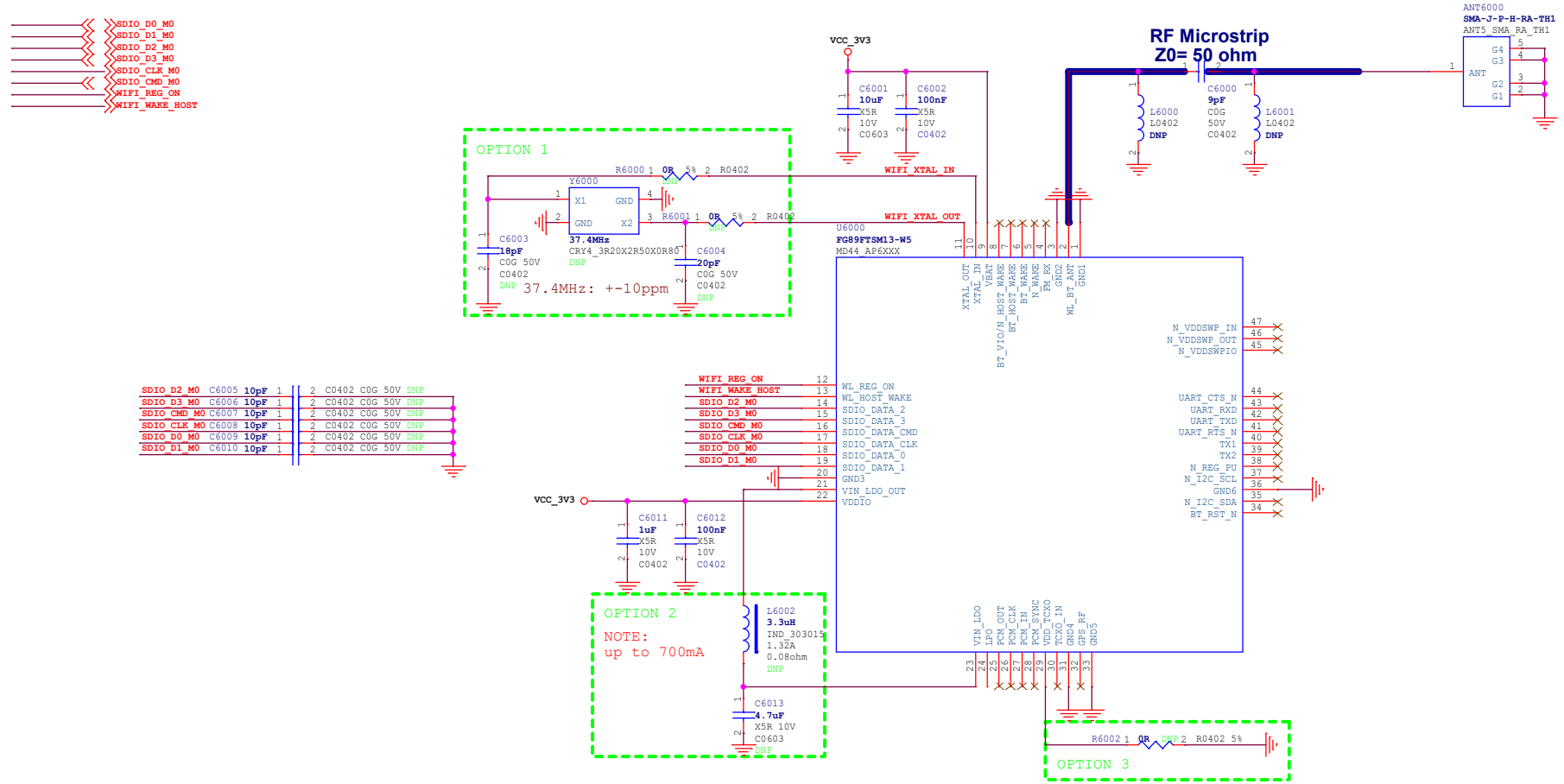

Note:
Yes: option circuit be mounted
No: option circuit not be mounted

TYPE	WIFI				BT	Crystals	VCCIO_SDIO	OPTION		
	a	b/g/n	ac	5GHz				1	2	3
AP6212	No	Yes	No	No	4.2/4.0	26MHz	1.8V/3.3V	Yes	Yes	No
RTL8189FTV-VC-CG Module FG89FTSM13-W5	No	Yes	No	No	No	Module Integrated	1.8V/3.3V	No	No	No
RTL8723DS Module 6223A-SRD	No	Yes	No	No	4.2	Module Integrated	1.8V/3.3V	No	No	No

Rockchip Confidential

Rockchip	Rockchip Electronics Co., Ltd				
Project:	RV1106G_CVR_REF				
File:	60.WIFI-SDIO_1T1R				
Date:	Friday, March 10, 2023			Rev:	V1.0
Designed by:	whb	Reviewed by:	Default	Sheet:	20 of 26

SPEAKER PA

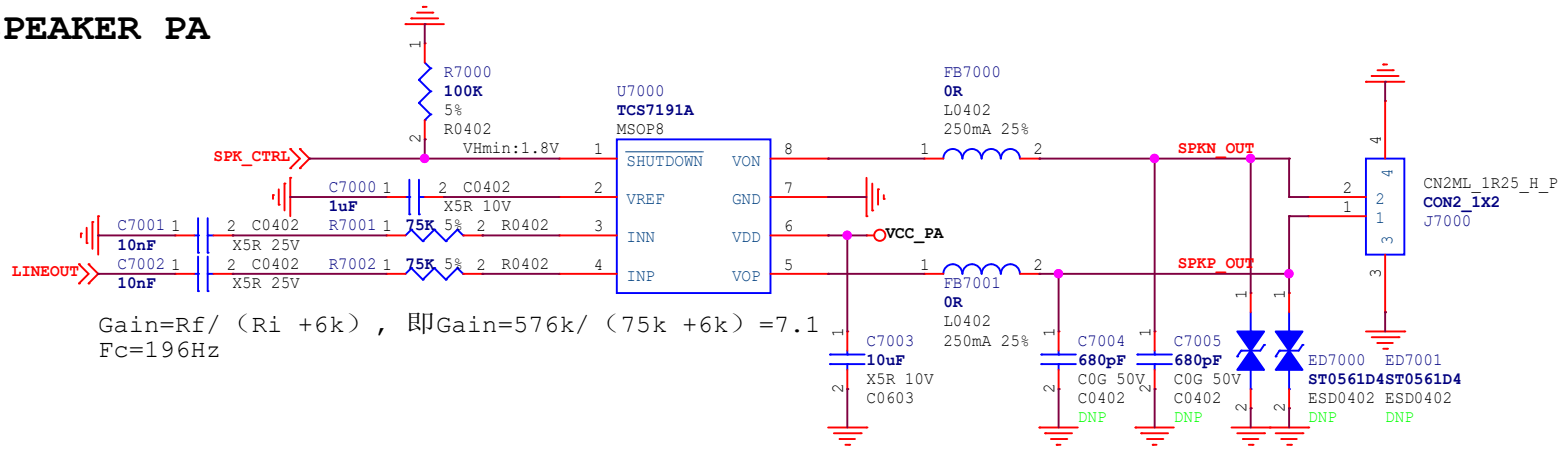

Gain=Rf/（Ri +6k），即Gain=576k/（75k +6k）=7.1
Fc=196Hz

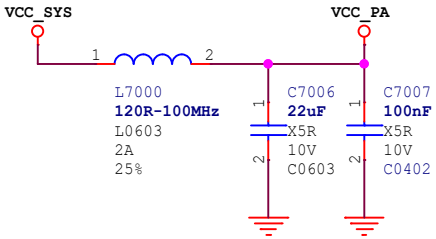

MIC

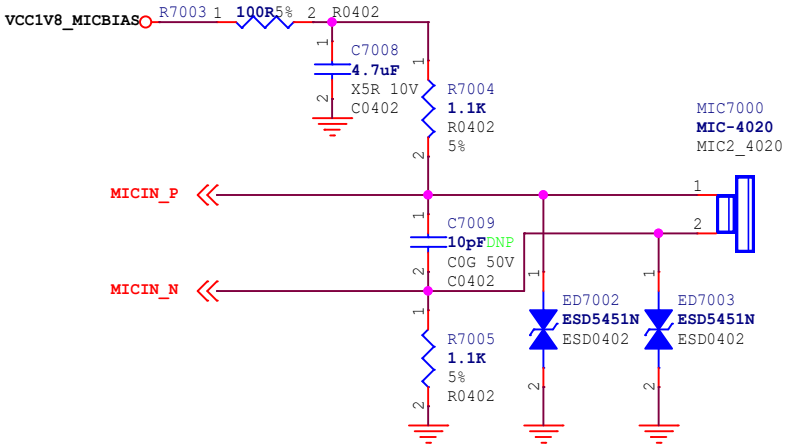

Rockchip Confidential

Rockchip	Rockchip Electronics Co., Ltd				
Project:	RV1106G_CVR_REF				
File:	70.Audio				
Date:	Friday, March 10, 2023			Rev:	V1.0
Designed by:	whb	Reviewed by:	Default	Sheet:	21 of 26

G-Sensor&Gyroscope

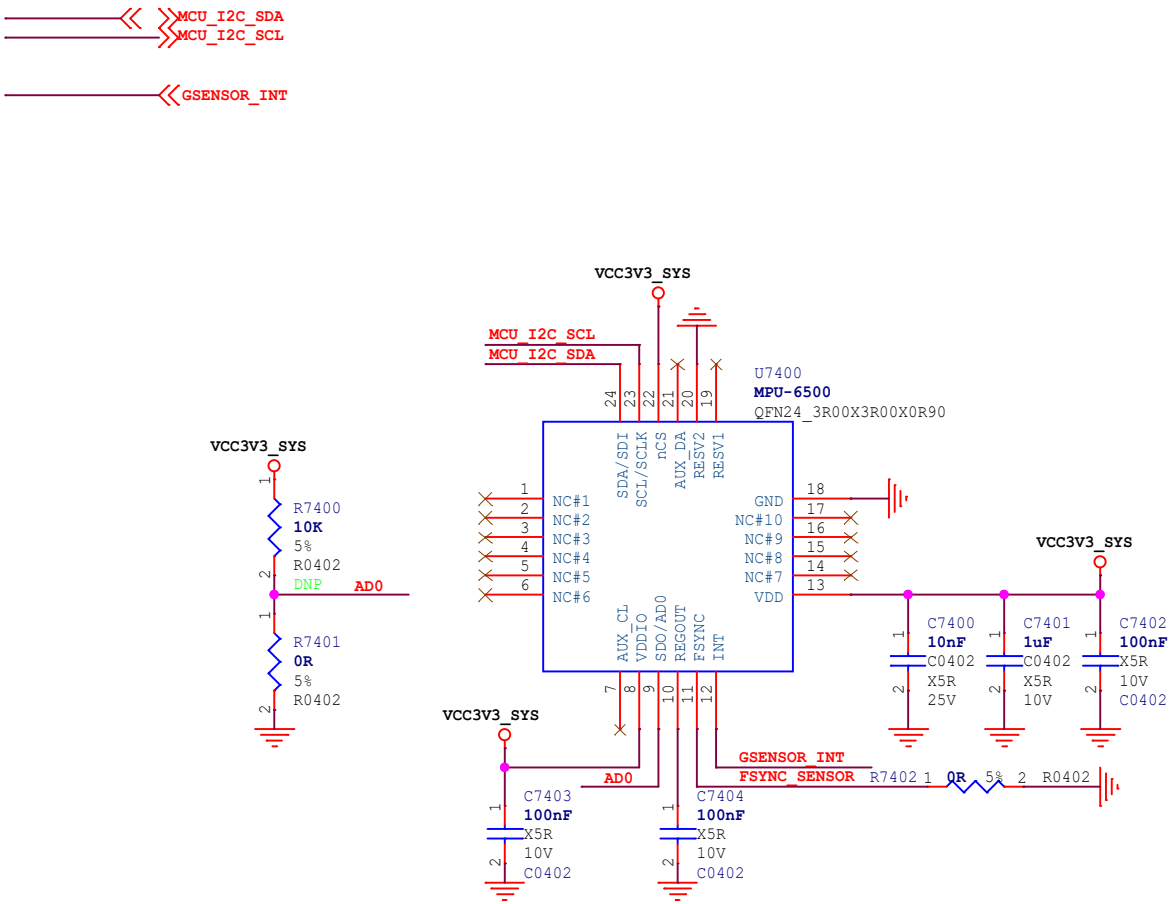

Rockchip Confidential

Rockchip Electronics Co., Ltd					
Project:	RV1106G_CVR_REF				
File:	74.G-Sensor/Gyroscope				
Date:	Friday, March 10, 2023			Rev:	V1.0
Designed by:	whb	Reviewed by:	Default	Sheet:	22 of 26

GPS

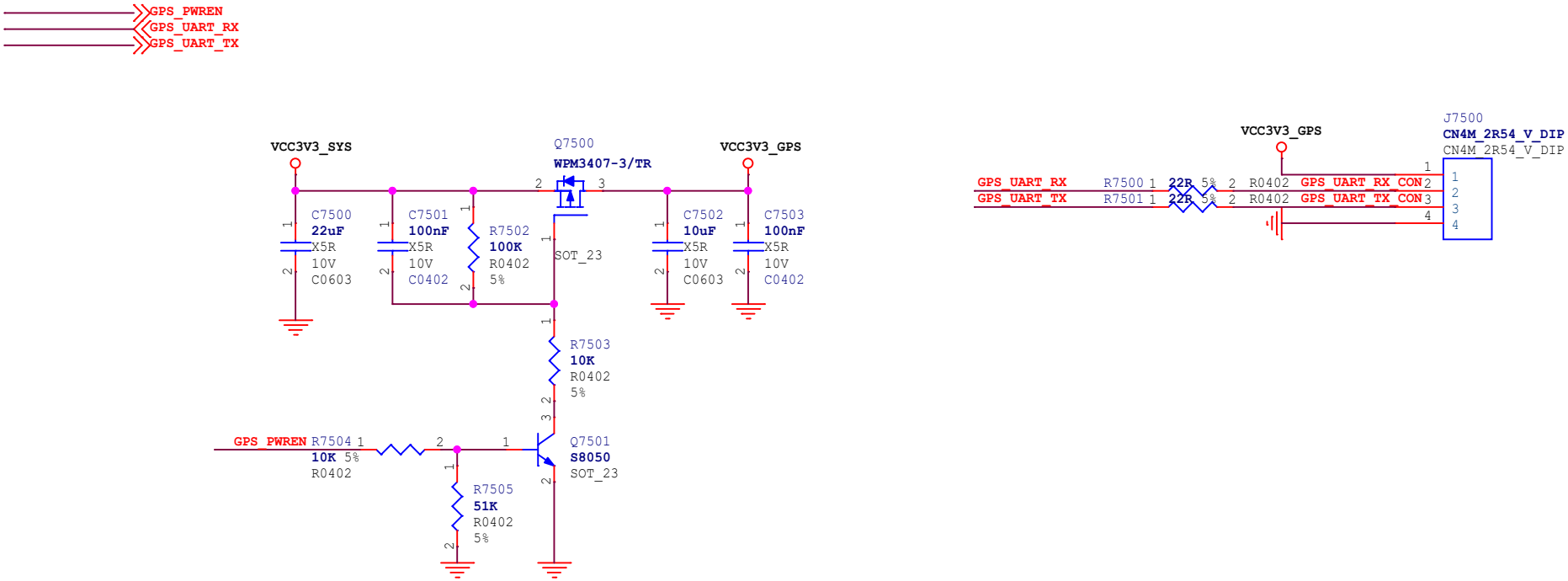

Rockchip Confidential

Rockchip Electronics Co., Ltd					
Project:	RV1106G_CVR_REF				
File:	75.GPS(OPTION)				
Date:	Friday, March 10, 2023			Rev:	V1.0
Designed by:	whb	Reviewed by:	Default	Sheet:	23 of 26

4G module

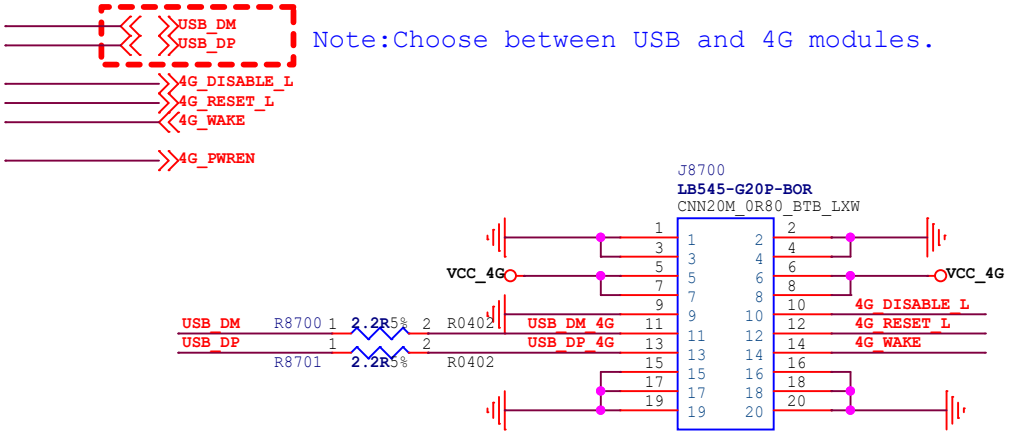

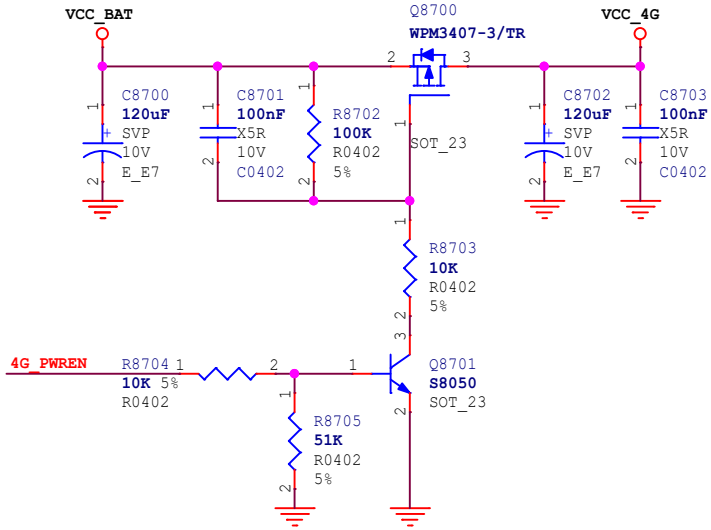

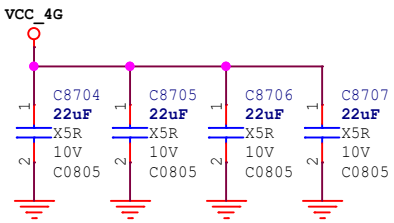

Rockchip Confidential

Rockchip Electronics Co., Ltd					
Project:	RV1106G_CVR_REF				
File:	87.4G module(OPTION)				
Date:	Friday, March 10, 2023			Rev:	V1.0
Designed by:	whb	Reviewed by:	Default	Sheet:	24 of 26

Key Array

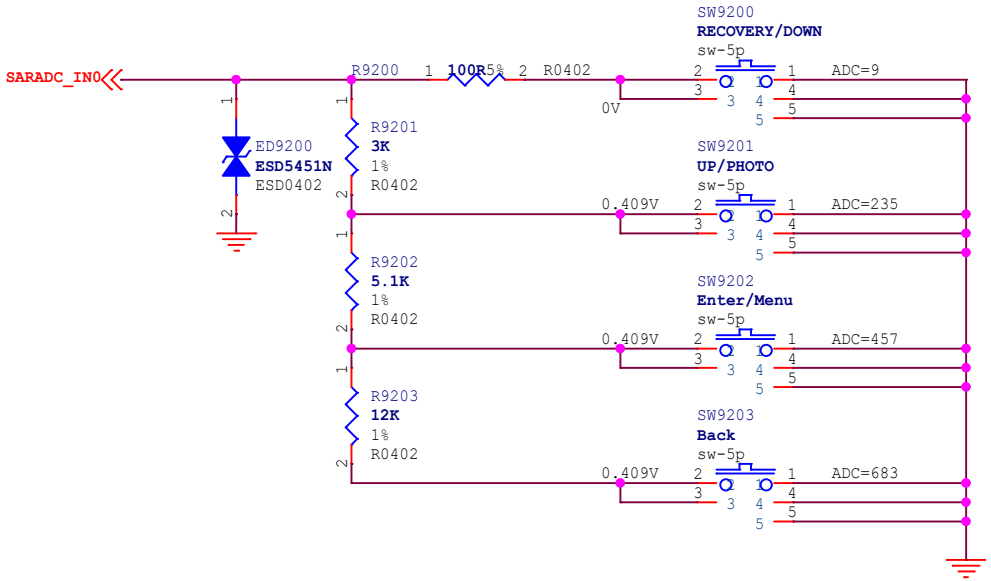

Rockchip Confidential

Rockchip Electronics Co., Ltd					
Project:	RV1106G_CVR_REF				
File:	92.Key Array				
Date:	Friday, March 10, 2023			Rev:	V1.0
Designed by:	whb	Reviewed by:	Default	Sheet:	25 of 26

HOLE

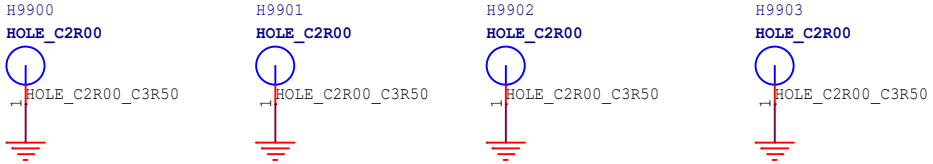

MARK

LENS

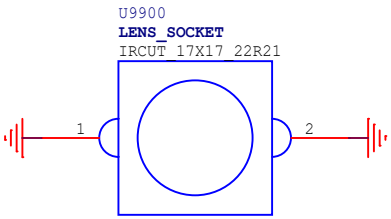

Rockchip Confidential

Rockchip Electronics Co., Ltd					
Project:	RV1106G_CVR_REF				
File:	99.Mark/Hole				
Date:	Friday, March 10, 2023			Rev:	V1.0
Designed by:	whb	Reviewed by:	Default	Sheet:	26 of 26